Spare part list:

BIOBASIC 410

Item number: 765042603 Rev. 002
Release date: 11-11-2022
Released by: Jan B. Poulsen
Approved by: John B. S. Petersen

Gram Scientific ApS
Aage Grams Vej 1
6500 Vojens, Danmark
Tel: +45 73 20 13 00
Fax: +45 73 20 12 01
www.gram-bioline.com

Biostorage you can depend on

Content

Content 2
Introduction and important note 3
Introduction to BIOBASIC 3
Important note concerning understanding spare list 3
Overall drawing of BIOBASIC 410 4
Sensors and sensor positioning 4
Front and back view of BIOBASIC 410 cabinet 5
Cooling parts and refrigeration diagram 6
BIOBASIC RR/RR* 6
BIOBASIC RF 8
BIOBASIC - other common parts 9
Electrical parts 10
Controllers and tabletop 10
Mechanical parts 12
Cabinet 12
Door RR/RF 13
Glass door RR* 14
Accessories 15
Wire shelves 15
Log book 16
Notes 17

Introduction and important note

Introduction to BIOBASIC

This spare part document is intended for the **BIOBASIC 410** product series.

The BIOBASIC range is available as a refrigerator or freezer as underbench (125 L), intermediate (218 L) or full height (346 L) and (600 L) models, all equipped with wire shelves as standard.
With temperature alarms, internal and external ATEX, no cold walls and a user-friendly interface, the BIOBASIC range offers an exceptional selection of features in a very small package. All refrigerators 210/310/410 are also available with glass doors.

Important note concerning understanding spare list

Please note that when ordering a spare part, the item number only applies to ordering one single spare part!

For this reason, there is a column in the tables with name "**Orig. used [pcs]**" that shows the amount of the spare parts that is originally used on the product. Perhaps when ordering new legs, the item number only applies to one single piece, but the column informs that 4 pieces have been used. In columns with "**Introduced**" and "**Terminated**", a six-digit number is given, which means product release year and week (YYYY-WW).

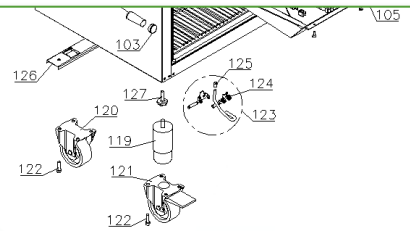

Item no.	Description	Orig. used (pcs)	Gram part no.	Introduced	Terminated
117	Fan motor gasket	1	761223110	2022-02	
118	Screw for fan motor (polyamide)	2	420790001	2022-02	
119	Leg H=100-130 mm	4	765080118	2022-02	
119	Leg H=134-200 mm	4	765080115	2022-02	
119	Leg H=180-250 mm	4	765080116	2022-02	
120	Fixed castor ø80/H=110 mm	2	480270521	2022-02	
120	Fixed castor ø100/H=128 mm	2	480270520	2022-02	
121	Swivel castor ø80/H=110 mm	2	480270522	2022-02	

NOTE: In this document is used abbreviations or abbreviated type designations like **RR, RR* and RF.**
BIOBASIC comes as a refrigerator with a solid door or with a glass door. The freezer always has a solid door. When looking for the right spare parts, some parts are common to all and the abbreviations are not shown. But if the spare parts are specifically used for perhaps freezers, or perhaps specifically used for refrigerators with glass doors, the abbreviations will be used to help ordering the right part.

The Type designated abbreviations are:
RR is used for BIOBASIC RR410 refrigerator with massive door
RR* is used for BIOBASIC RR410 refrigerator with glass door
RF is used for BIOBASIC RF410 freezer with massive door

Overall drawing of BIOBASIC 410

Sectional drawing of BioCompact II RR/RR*/RF cabinet with Electrical and Piping system represented.

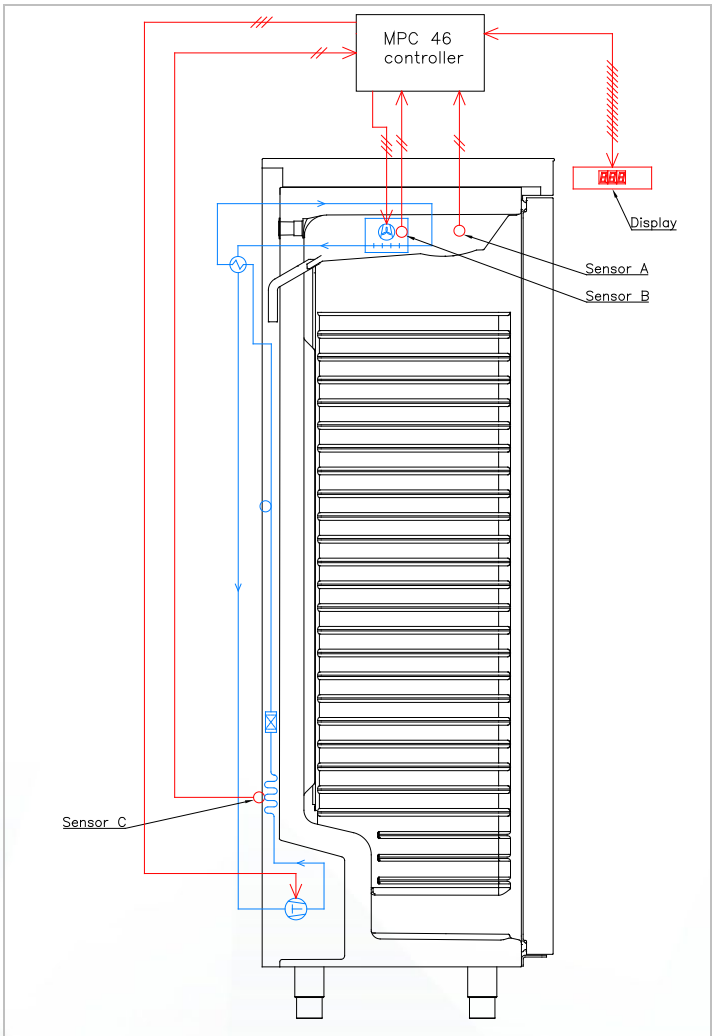

*Sensor positioning: RR & RR**
Sensor F in RR & RR with Electronic LTP is optional*

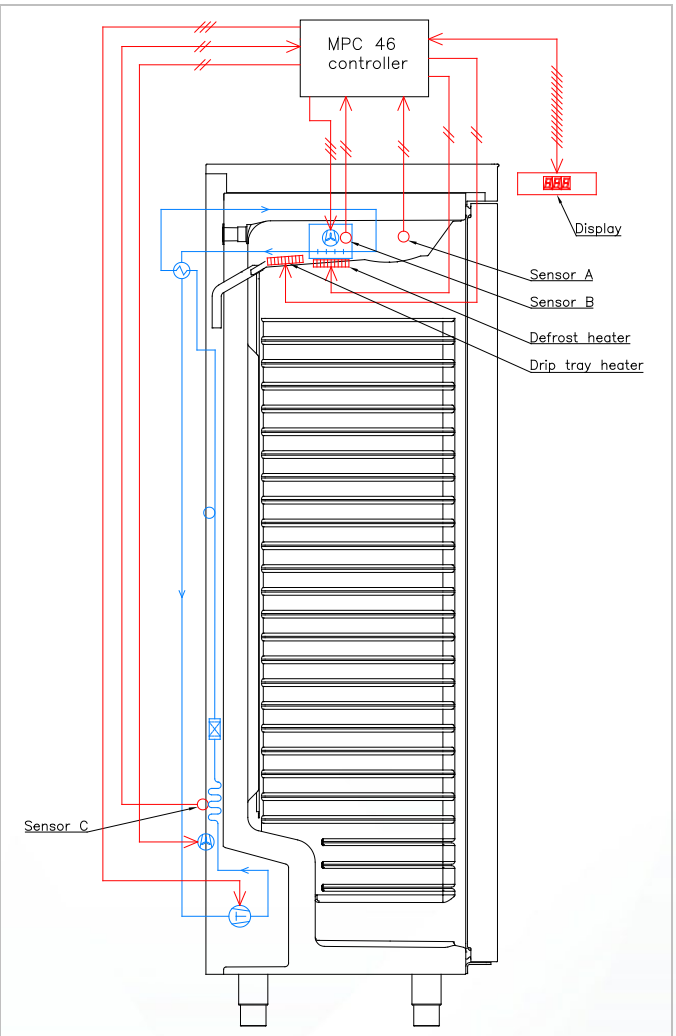

Sensor positioning: RF

Sensors and sensor positioning

Item no.	Description	Orig. used (pcs)	Gram part no.	Introduced	Terminated
A	Room sensor (2500 mm)	1	453531504	2022-02	
B	Defrost sensor (1500 mm)	1	453531501	2022-02	
C	Condenser sensor (1000 mm)	1	453531500	2022-02	

Note: For A-sensor, see section for Mechanical parts. For B- and C-sensor see section for Refrigeration parts.

Front and back view of BIOBASIC 410 cabinet

Front of cabinet (left) seen from left upper corner and down. Back of cabinet (right) seen from right upper corner and down.

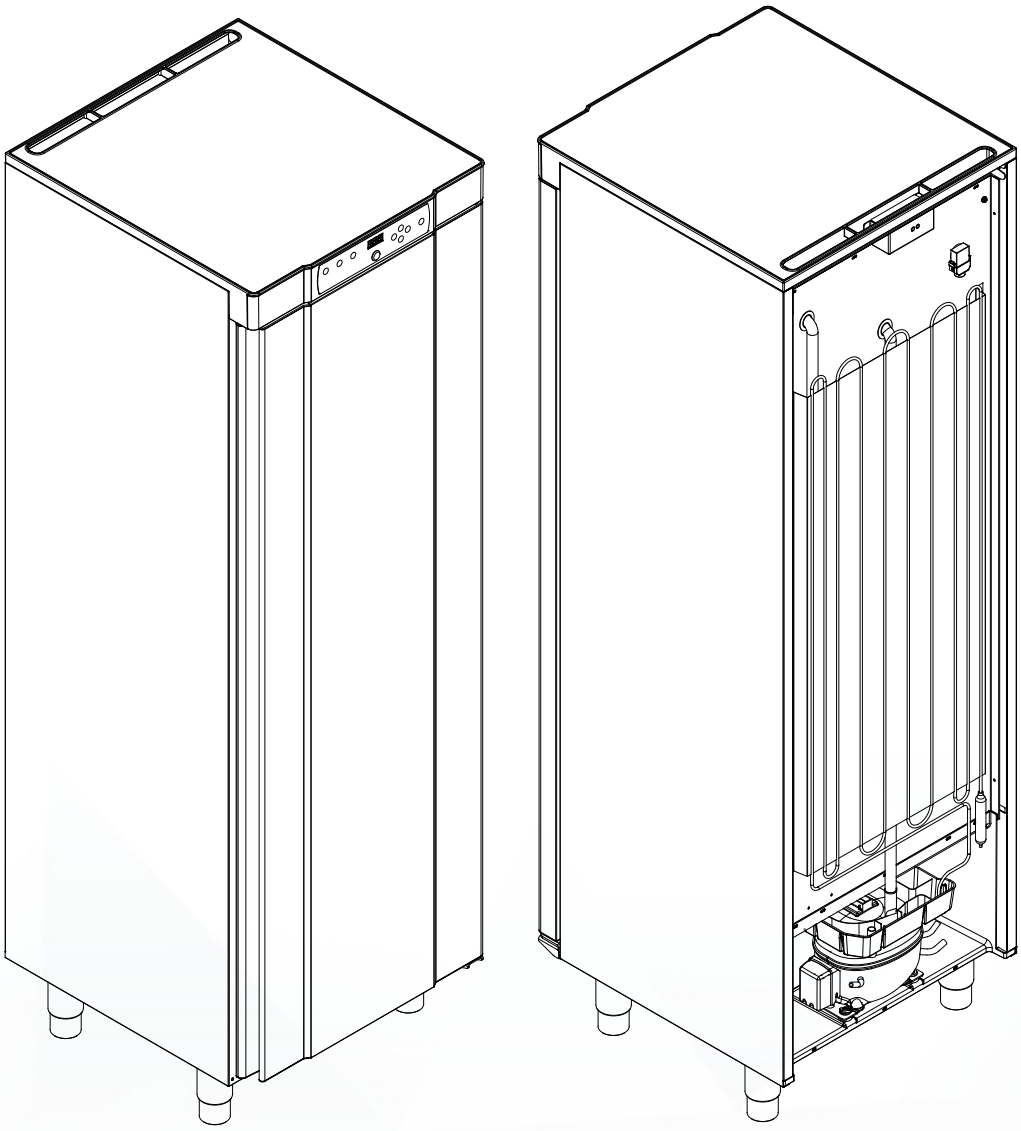

Cooling parts and refrigeration diagram

BIOBASIC RR/RR*

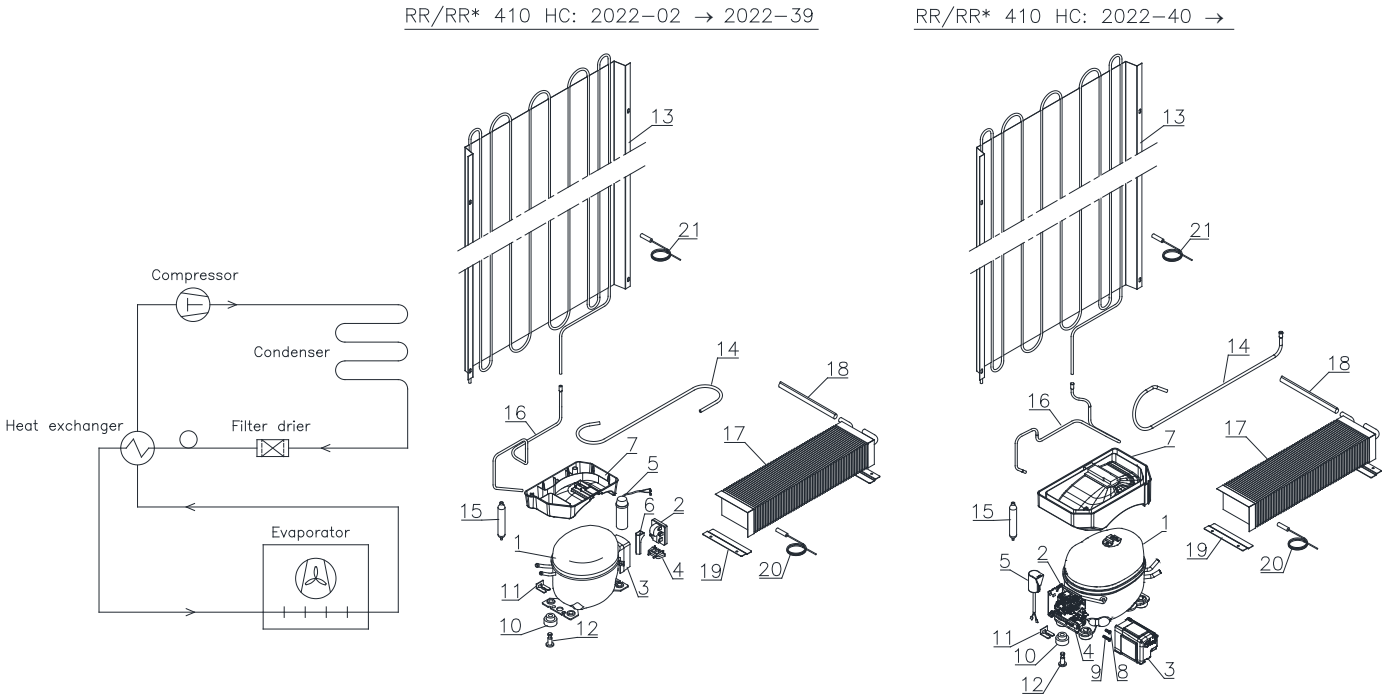

Item no.	Description RR with HC (R600a)	Orig. used (pcs)	Gram part no.	Introduced	Terminated
1	Compressor TLY6.5KK.3	1	500550093	2022-02	2022-39
2	PTC Starting device	1	453050178	2022-02	2022-39
3	Cover	1	452440293	2022-02	2022-39
4	Cord relief	1	452440300	2022-02	2022-39
5	Run capacitor 4 µF	1	451723513	2022-02	2022-39
6	PTC cover	1	452440290	2022-02	2022-39
7	Re-evaporation tray	1	410820001	2022-02	2022-39

Item no.	Description RR with HC (R600a)	Orig. used (pcs)	Gram part no.	Introduced	Terminated
1	Compressor HXK70AA	1	506000011	2022-40	
2	Starting device	1	453050183	2022-40	
3	Cover	1	452440307	2022-40	
4	Cord relief	1	452440306	2022-40	
5	Run capacitor 4 µF	1	451723524	2022-40	
7	Re-evaporation tray – RR (HXK70AA)	1	410820018	2022-40	
8	Screw 3.9 L9.5	1	452440308	2022-40	
9	Screw 3.9 L19	1	452440309	2022-40	

Item no.	Description RR* with HC (R600a)	Orig. used (pcs)	Gram part no.	Introduced	Terminated
1	Compressor TLY10KK.3	1	500550091	2022-02	2022-39
2	Starting device	1	453050178	2022-02	2022-39
3	Cover	1	452440293	2022-02	2022-39
4	Cord relief	1	452440297	2022-02	2022-39
5	Run capacitor 4 µF	1	451723513	2022-02	2022-39
6	PTC cover	1	452440290	2022-02	2022-39
7	Re-evaporation tray	1	410820001	2022-02	2022-39

Item no.	Description RR* with HC (R600a)	Orig. used (pcs)	Gram part no.	Introduced	Terminated
1	Compressor HXK95AT	1	506000012	2022-40	
2	Starting device	1	453050184	2022-40	
3	Cover	1	452440307	2022-40	
4	Cord relief	1	452440306	2022-40	
5	Run capacitor 4 µF	1	451723523	2022-40	
7	Re-evaporation tray – RR* (HXK95AT)	1	410820018	2022-40	
8	Screw 3.9 L9.5	1	452440308	2022-40	
9	Screw 3.9 L19	1	452440309	2022-40	

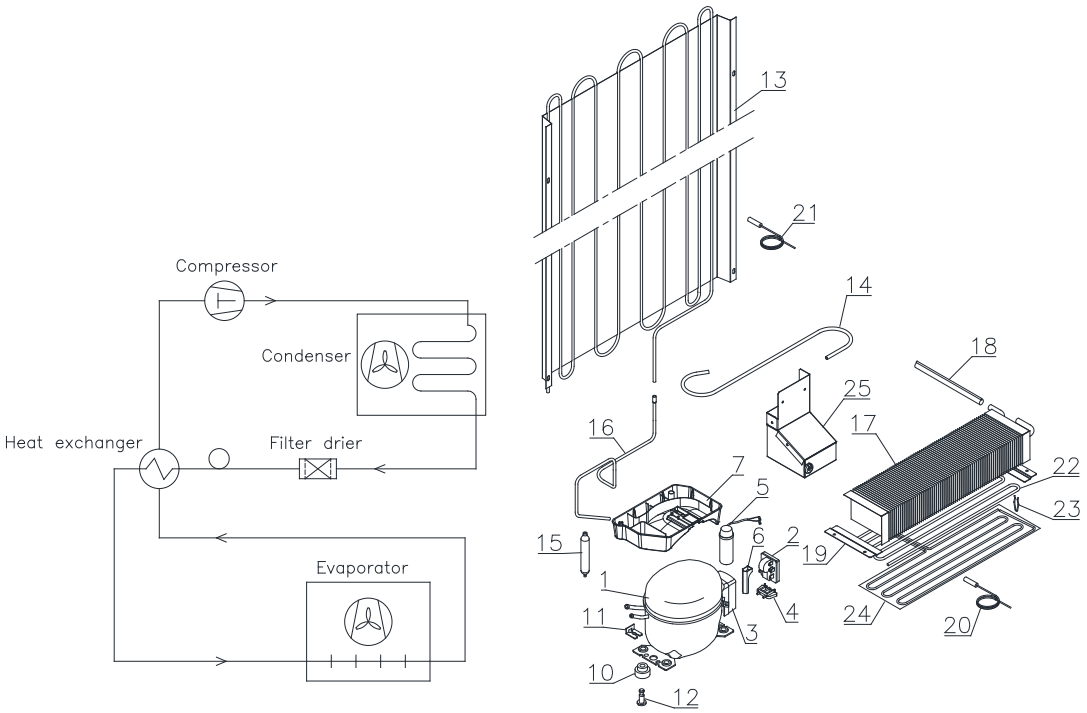

Item no.	Description RF with HC (R600a)	Orig. used (pcs)	Gram part no.	Introduced	Terminated
1	Compressor NLX13.KK.1	1	500550096	2022-02	
2	Starting device	1	453050178	2022-02	
3	Cover	1	452440293	2022-02	
4	Cord relief	1	452440297	2022-02	
5	Run capacitor 4 µF	1	451723513	2022-02	
6	PTC cover	1	452440290	2022-02	
7	Re-evaporation tray – RF	1	410820011	2022-02	

BIOBASIC - other common parts

Item no.	Description	Orig. used (pcs)	Gram part no.	Introduced	Terminated
10	Rubber bush	4	760080519	2022-02	
11	Compressor clip	2	760082367	2022-02	
12	Compressor screw	2	760082711	2022-02	
13	Condenser	1	761223011	2022-02	2022-39
13	Condenser	1	761223016	2022-40	
14	Intermediate pipe Ø6 RR/RR*	1	760000317	2022-02	2022-39
14	Intermediate pipe Ø6 RF	1	760000317	2022-02	
14	Intermediate pipe ø6 x 0,62 RR/RR* (KAPPA HXK)	1	760000463	2022-40	
15	Filter drier 7,5 gr. Ø2,1/5,1 mm – RR/RR*	1	761221321	2022-02	
15	Filter drier 15 gr. Ø2,1/5,1 mm – RF	1	761221322	2022-02	
16	Hot gas re-evaporation pipe RR/RR*	1	760000323	2022-02	2022-39
16	Hot gas re-evaporation pipe RF	1	760000323	2022-02	
16	Hot gas re-evaporation pipe – RR/RR* (KAPPA HXK)	1	760000462	2022-40	
17	Evaporator – RR/RR*	1	765080412	2022-02	
17	Evaporator – RF	1	765080413	2022-02	
18	Heat exchanger - RR	1	761221419	2022-02	2022-39
18	Heat exchanger - RR*	1	761221420	2022-02	2022-39
18	Heat exchanger - RF	1	761221416	2022-02	
18	Heat exchanger – RR/RR* (KAPPA HXK)	1	762231400	2022-40	
19	Evaporator suspension bracket	2	761223070	2022-02	
20	Defrost sensor (B-sensor, 1500 mm)	1	453531501	2022-02	
21	Condenser sensor (C-sensor, 1000 mm)	1	453531500	2022-02	
22	Defrost heater - RF	1	765072163	2022-02	
23	Clip for heater - RF	8	761222779	2022-02	
24	Drip tray heater - RF	1	765071199	2022-02	
25	Condenser fan complete - RF	1	761221780	2022-02	

Electrical parts

Controllers and tabletop

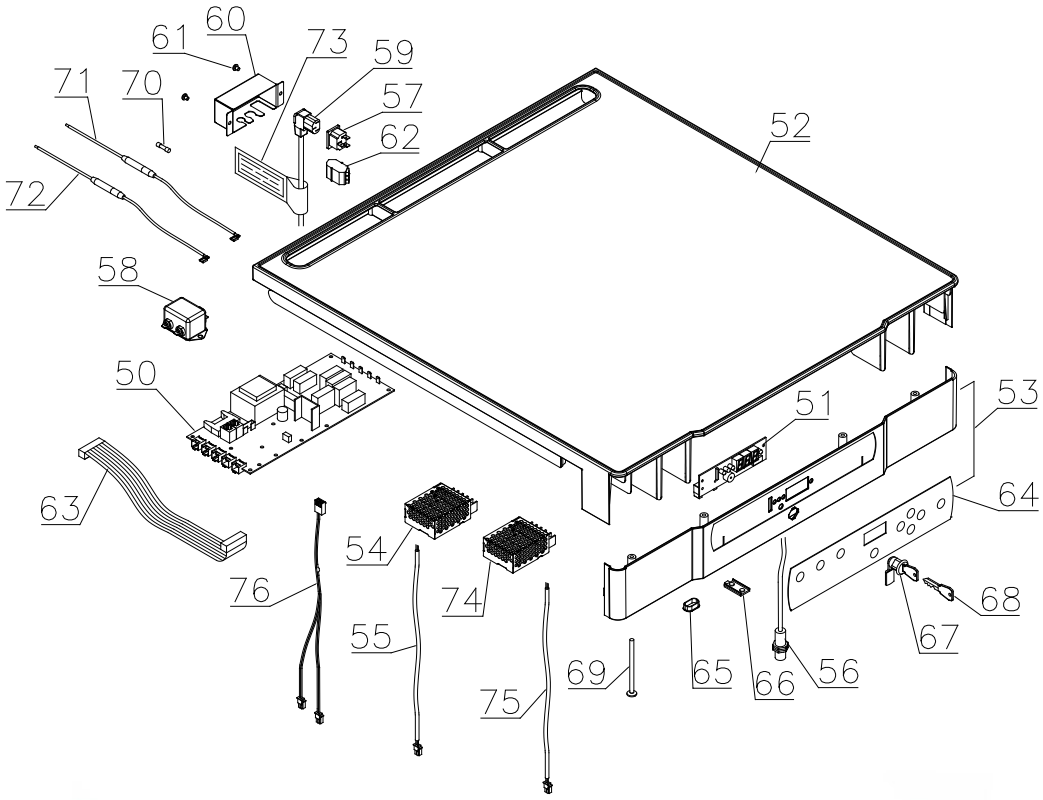

Item no.	Description	Orig. used (pcs)	Gram part no.	Introduced	Terminated
50	Electronic controller K72 – RR	1	761256172	2022-02	
50	Electronic controller K73 – RR*	1	761256173	2022-02	
50	Electronic controller F72 – RF	1	761256174	2022-02	
51	Display PCB	1	612900059	2022-02	
52	Table top upper part	1	761234133	2022-02	
53	Table top front	1	761234140	2022-02	
54	Power Supply Unit for fan motor	1	765072987	2022-02	
55	Fan wire	1	765072656	2022-02	
56	Door switch	1	450400111	2022-02	
57	Appliance inlet	1	451022002	2022-02	
58	EMI/EMC filter	1	451022004	2022-02	
59	Power cord, EU	1	765072566	2022-02	
59	Power cord, UK	1	765072567	2022-02	
59	Power cord, DK	1	765072568	2022-02	
60	Cover for power connection	1	762232110	2022-02	
61	Screw M4x10	2	420340070	2022-02	
62	Alarm terminal block	1	765070705	2022-02	
63	Ribbon cable (500 mm)	1	765072661	2022-02	
64	Keypad – 8 buttons – RR/RR*	1	765042577	2022-02	
64	Keypad – 8 buttons – RF	1	765042578	2022-02	

Item no.	Description	Orig. used (pcs)	Gram part no.	Introduced	Terminated
65	Cap for programming cable	1	765080566	2022-02	
66	Cover plug, white	1	765081247	2022-02	
67	Door lock w/2 keys	1	765080093	2022-02	
68	Key	1	761220166	2022-02	
69	Screw M4x70	4	420178125	2022-02	
70	10 A Time-delay fuses 5 x 20 mm	2	765070719	2022-02	
71	Wire incl. time-delay fuse, phase	1	765073355	2022-02	
72	Wire incl. time-delay fuse, neutral	1	765073356	2022-02	
73	Hangtag	1	765040288	2022-02	
74	Power Supply Unit to LED light in glass door – RR*	1	765073350	2022-02	
75	Wire to LED light in glass door – RR*	1	765072682	2022-02	
76	Heater wire incl. thermal limiter – RF	1	765073327	2022-02	

Mechanical parts

Cabinet

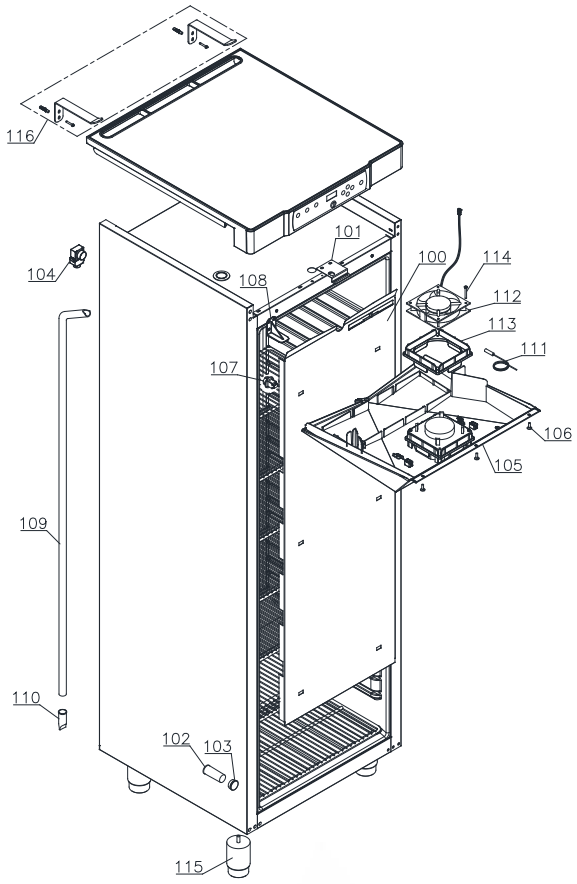

Item no.	Description	Orig. used (pcs)	Gram part no.	Introduced	Terminated
100	Air distribution plate	1	761234143	2022-02	
101	Lock bracket	1	761222761	2022-02	
102	Insulation plug for access port	1	765080563	2022-02	
103	Plastic cap	1	501020023	2022-02	
104	Air relief valve	1	765081206	2022-02	
105	Drip tray complete incl. fan, gasket and screws	1	762223098	2022-02	
106	Screw M4x16	3	422701019	2022-02	
107	Suspension plug	6	765081213	2022-02	
108	Cover bracket	1	761222758	2022-02	
109	Drain pipe	1	761221756	2022-02	
109	Drain pipe RR/RR* (HXK95AT & HXK95AT)	1	762230401	2022-40	
110	Water trap	1	760082891	2022-02	
111	Room sensor (A-sensor, 2500 mm)	1	453531504	2022-02	
112	Evaporator fan	1	765071446	2022-02	
113	Fan motor gasket	1	761223110	2022-02	
114	Screw for fan motor (polyamide)	2	420790001	2022-02	
115	Leg H=100-130 mm	4	765080118	2022-02	
116	Cabinet anti-tilt set	1	819581051	2022-02	

Door RR/RF

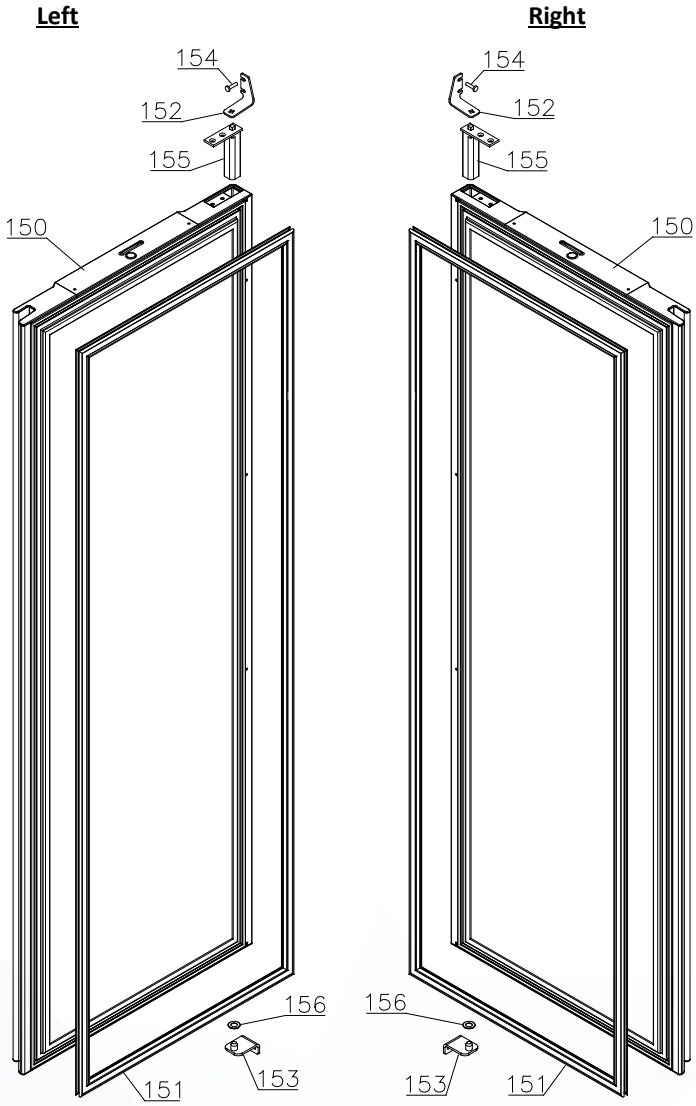

Item no.	Description	Orig. used (pcs)	Gram part no.	Introduced	Terminated
150	Door complete, white – right RR	1	761232907	2022-02	2024-40
150	Door complete, white – right RR/RF	1	762234008	2024-41	
150	Door complete, white – left RR	1	761232917	2022-02	2024-40
150	Door complete, white – left RR/RF	1	762234009	2024-41	
150	Door complete, white – right RF	1	761232922	2022-02	2024-40
150	Door complete, white – left RF	1	761232923	2022-02	2024-40
151	Gasket	1	761222729	2022-02	
152	Top hinge, right	1	762222806	2022-02	
152	Top hinge, left	1	762222808	2022-02	
153	Bottom hinge, right/left	1	762222805	2022-02	
154	Screw M5x12	4	420182000	2022-02	
155	Self-closing device	1	763251880	2022-02	
156	Washer	1	760250524	2022-02	

Glass door RR*

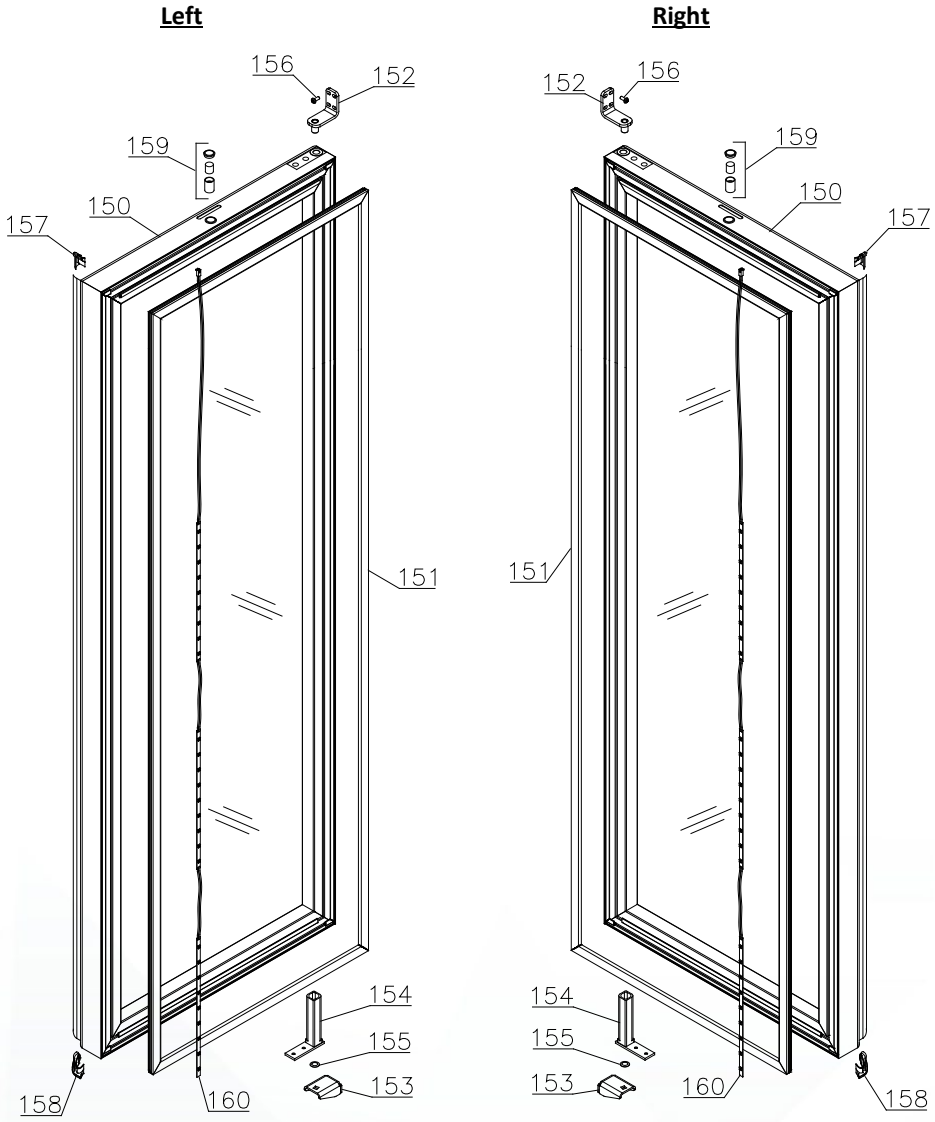

Item no.	Description	Orig. used (pcs)	Gram part no.	Introduced	Terminated
150	Glass door, right	1	761232964	2022-02	
150	Glass door, left	1	761234115	2022-02	
151	Gasket	1	761222705	2022-02	
152	Top hinge	1	761222906	2022-02	
153	Bottom hinge, right	1	762222829	2022-02	
153	Bottom hinge, left	1	762222830	2022-02	
154	Self-closing device	1	763251745	2022-02	
155	Washer	1	420178003	2022-02	
156	Screw M5x12	4	420182000	2022-02	
157	Top plastic end fitting	1	761222724	2022-02	
158	Bottom plastic end fitting	1	761222725	2022-02	
159	Door magnet complete	1	761250786	2022-02	
160	LED light strip	1	761222707	2022-02	

Accessories

Wire shelves

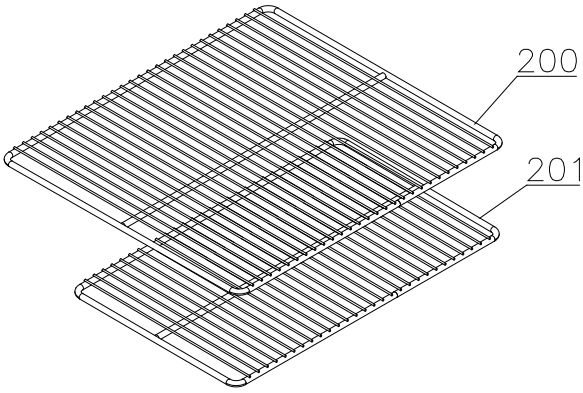

Item no.	Description	Orig. used (pcs)	Gram part no.	Introduced	Terminated
200	Wire shelf, large – white	5	818721001	2022-02	
201	Wire shelf, small – white	1	818721019	2022-02	

Log book

Continuous changes are introduced in the log book.

Version 002:

- **28. October 2024:** Pos 150 – new door added.

Version 001:

- **11. November 2022:** First release of this Spare Part document.

Notes